Electrolux PROFESSIONAL

Tumble dryer

TD7-8

Vented electric / gas

High-Performance Commercial Drying • Low operating cost • Built to Last

With an unmatched Drying Performance this exceptional professional tumble dryer deliver consistently high quality results from Swedish technology engineered for precision.

The winner takes it all

With the right combination together with our WP7 washer serie, you can reach unbelievable 15% energy saving in drying.

40,000 DRY CYCLES

Longest life time: 40 000 cycles.

Durability is the new profit: the only investment that wins your trust cycle by cycle.

OPTIMIZED AIRFLOW & HEATING

Optimized airflow and heating, tailored for electric, gas, and heat pump models, secures fast, reliable drying cycles.

MOISTURE BALANCE

Moisture Balance ensures accurate drying whilst saving energy, preventing over-drying and textile damage. (Optional).

OnE Connected

Monitor and control all the operations behind your laundry room, quantifying savings and productivity. Anytime. Anywhere.

UNIVIBE

Fully personalized 4.3" touch panel: UniVibe gives the operator an easy and smooth experience and you will have all the possibilities to adapt for your business requirements.

Main specifications		TD7-8
Rated capacity, filling factor 1:15	kg / lb	9.0 / 19.8
Rated capacity, filling factor 1:18	kg / lb	7.5 / 16.5
Rated capacity, filling factor 1:22	kg / lb	6.1 / 13.4
Drum, volume	litre	135
Drum, diameter	ø mm	575
Heating alternatives:		
El	kW	3.0 / 4.5 / 6.0
Gas	kW / BTU/h	7.0 / 23900

Consumption data[1]		El 3.0 kW	El 4.5 kW	El 6.0 kW	Gas
Total time	min	57	40	30	30
Energy consumption	kWh	3.11	3.11	3.04	3.67
Evaporation	g/min	54	78	104	101
Energy water evaporation	kWh/l	1.01	1.01	0.99	1.20

1. At rated capacity 1:22, 100% cotton load at 50% initial moisture dried to 0%.

Main specifications		TD7-8 with heat pump
Rated capacity, filling factor 1:15	kg / lb	9.0 / 19.8
Rated capacity, filling factor 1:18	kg / lb	7.5 / 16.5
Rated capacity, filling factor 1:22	kg / lb	6.1 / 13.4
Drum, volume	litre	135
Drum, diameter	ø mm	575
Rated input	kW	2.3

Consumption data[1]		TD7-8 with heat pump
Total time	min	42
Energy consumption	kWh	1.28
Evaporation	g/min	73
Energy water evaporation	kWh/l	0.42

1. At rated capacity 1:22, 100% cotton load at 50% initial moisture dried to 0%.

Electrical connections					
Heating alternative	Main voltage	Hz	Heating power kW	Total power kW	Recommended fuse A
Electric heated machines	220-240V 1/1N~	50/60	3.0/4.5/6.0	3.4/4.9/6.4	16/25/32
	220-240V 3~	50/60	4.5/6.0	4.9/6.4	13/20
	380-415V 3N/3~	50/60	4.5/6.0	4.9/6.4	10/10
	440/480V 3~	60	4.5/6.0	4.9/6.4	10/10
Gas heated machines	220-480V 1/1N/3/3N~	50/60	[1]	0.4	10

1. Total power and recommended fuse does not depend on the heating power in those cases.

Gas and air connections[1]		
Gas	ISO 7/1-R	1/2"
Gas pressure, Natural gas	Pa	2000
	mbar	20
Gas pressure, Propane	Pa	2800-5000
	mbar	28-50
Air outlet	ø mm	125
Evacuated air, electric, 3.0/4.5 kW	m^3/h	150
Evacuated air, electric, 6.0 kW	m^3/h	220
Evacuated air, gas, 7.0 kW	m^3/h	280
Pressure drop, electric, 3.0/4.5 kW	Max. Pa	350
Pressure drop, electric, 6.0 kW	Max. Pa	270
Pressure drop, gas, 7.0 kW	Max. Pa	230
Sound levels		
Sound power/pressure level at drying[2]	dB(A)	63/48
Heat emission		
% of installed power, max		15
Shipping data[3]		
Weight	net, kg	109
Shipping volume	m^3	0.81

1. The default gas appliances are built to run on either GNH or LPG gas where shall be installed at not over than 610 m (2001 ft) high altitude otherwise a kit for high altitude must be installed to the machine. For the kit No. please refer to the spare parts list.
2. Sound power levels measured according to ISO 60704.
3. Average data. Crated weight/shipping volume depends on configuration. Please contact logistics for exact measures.

Produced according to ISO 9001 and ISO 14001.
Certified with CB certificate for Low Voltage Directive and S-mark according to the Machinery Directive. Protection class IP X4D.
Silver grey and dark blue color samples can be ordered on part number 472998313.

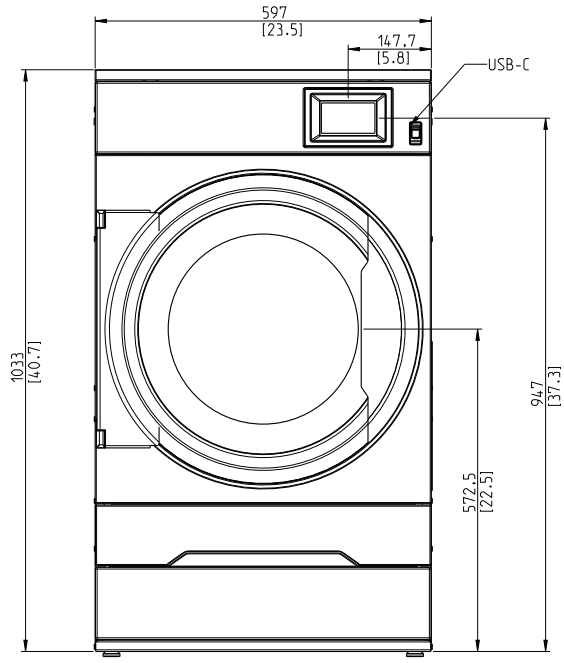
597
[23.5]
147.7
[5.8]
USB-C
1033
[40.7]
947
[37.3]
572.5
[22.5]

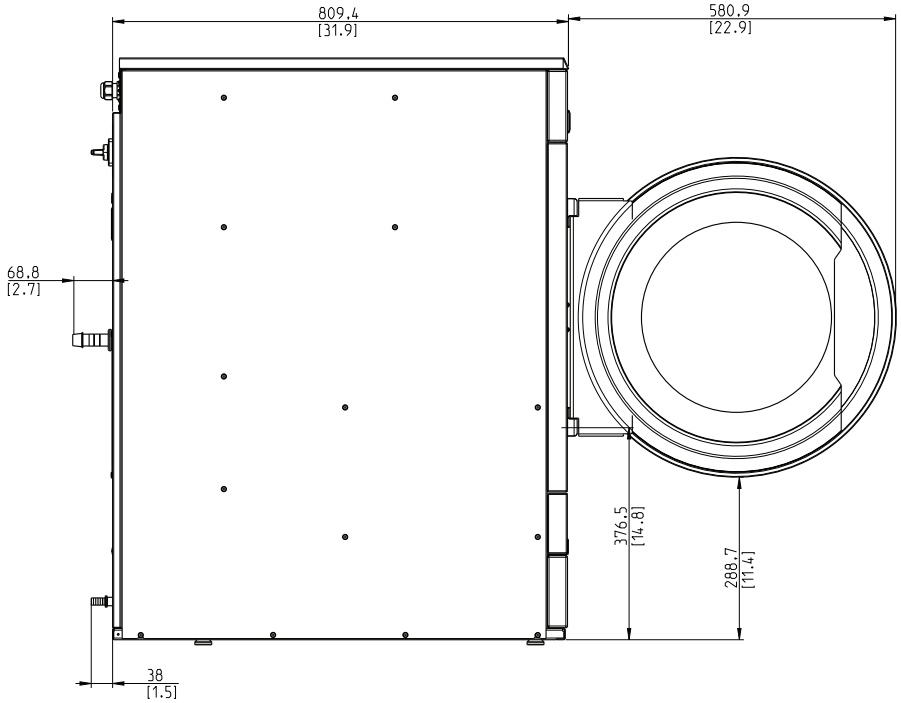
809.4
[31.9]
580.9
[22.9]
68.8
[2.7]
376.5
[14.8]
288.7
[11.4]
38
[1.5]

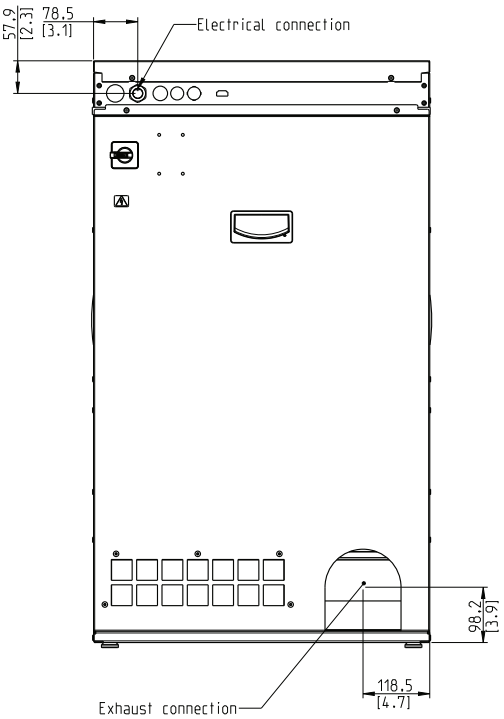
57.9
[2.3]
78.5
[3.1]
Electrical connection
98.2
[3.9]
118.5
[4.7]
Exhaust connection

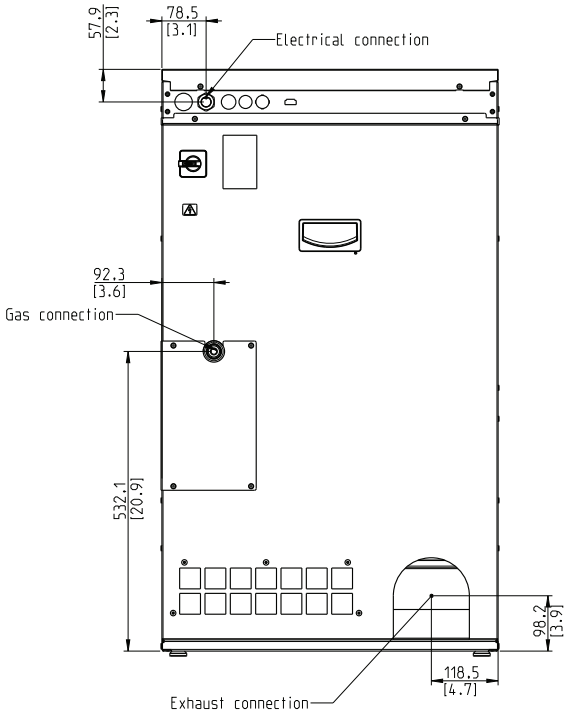
57.9
[2.3]
78.5
[3.1]
Electrical connection
92.3
[3.6]
Gas connection
532.1
[20.9]
98.2
[3.9]
118.5
[4.7]
Exhaust connection

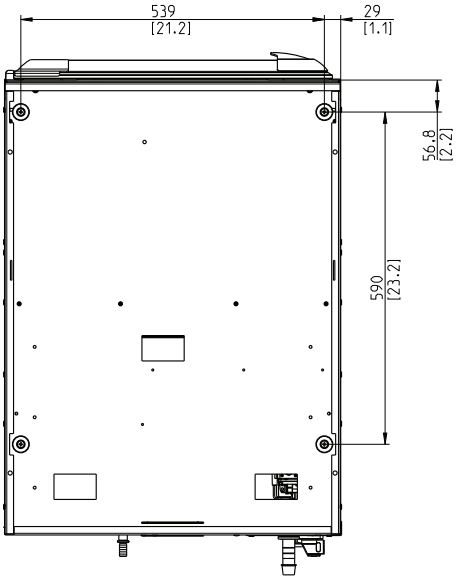
539
[21.2]
29
[1.1]
56.8
[2.2]
590
[23.2]

Options and accessories

- Insulated glass door keeps the door cool on the outside and heat on the inside, so the room temperature is not affected
- Lagoon Advanced Care
- Door, front and side panels are available in stainless steel
- Connectable to booking-/payment system or coin meter
- Base and stacking kit available for a combination with washer but also dryer on dryer

Electrolux PROFESSIONAL

Tumble dryer
TD7-8
with heat pump

High-Performance Commercial Drying • Low operating cost • Built to Last

With an unmatched Drying Performance this exceptional professional tumble dryer deliver consistently high quality results from Swedish technology engineered for precision.

The winner takes it all

With the right combination together with our WP7 washer serie, you can reach unbelievable 15% energy saving in drying.

40,000 DRY CYCLES

Longest life time: 40 000 cycles.

Durability is the new profit: the only investment that wins your trust cycle by cycle.

OPTIMIZED AIRFLOW & HEATING

Optimized airflow and heating, tailored for electric, gas, and heat pump models, secures fast, reliable drying cycles.

M.E.M.E. Minimum Energy Maximum Efficiency

Minimum Energy Maximum Efficiency (MeMe).

Save up to 65% in energy with our patented heat pump – optimized by the electronic valve and inverter technology for maximum drying efficiency with the fastest drying time.

ECO PROGRAM

Save even more with ECO- Program; Where quick drying time is irrelevant; running an Eco-Program can save additional 18% in energy savings per kg linen.

LOAD INTELLIGENCE

Small load? No problem! The first dryer to optimize energy and efficiency with less than full load. Choose the Eco-Program and Save up to 8% in energy consumption by knowing the drum load.

OnE Connected

Monitor and control all the operations behind your laundry room, quantifying savings and productivity. Anytime. Anywhere.

UNIVIBE

Fully personalized 4.3" touch panel: UniVibe gives the operator an easy and smooth experience and you will have all the possibilities to adapt for your business requirements.

Main specifications		TD7–8
Rated capacity, filling factor 1:15	kg / lb	9.0 / 19.8
Rated capacity, filling factor 1:18	kg / lb	7.5 / 16.5
Rated capacity, filling factor 1:22	kg / lb	6.1 / 13.4
Drum, volume	litre	135
Drum, diameter	ø mm	575
Rated input	kW	2.3

Consumption data[1]		
Total time	Min	42
Energy consumption	kWh	1.28
Evaporation	g/min	73
Energy water evaporation	kWh/l	0.42

1. At rated capacity 1:22, 100% cotton load at 50% initial moisture dried to 0%.

Electrical connections					
Heating alternative	Main voltage	Hz	Heating power kW	Total power kW	Recommended fuse A
Machines with heat pump	220-240V 1/1N 3~	50/60	[1]	2.3	10
	380-415V 3N~	50/60	[1]	2.3	10

1. Total power and recommended fuse does not depend on the heating power in those cases.

Sound levels		
Sound power/pressure level at drying[1]	dB(A)	63/48
Heat emission		
Average heat emission per drying cycle used to assess ventilation need[2]	kW	0.7
Shipping data[3]		
Weight	net, kg	131
Shipping volume	m^3	0.81

1. Sound power levels measured according to ISO 60704.
2. For assistance with dimensioning necessary ventilation needs, contact authorized ventilation technician. For sufficient ventilation all sources introducing heat need to be taken into account plus all other parameters effecting the ventilation need. Climate zone, building parameters, room size, etc.
3. Average data. Crated weight/shipping volume depends on configuration. Please contact logistics for exact measures.

Produced according to ISO 9001 and ISO 14001.
Certified with CB certificate for Low Voltage Directive and S-mark according to the Machinery Directive. Protection class IP X4D.
Silver grey and dark blue color samples can be ordered on part number 472998313.

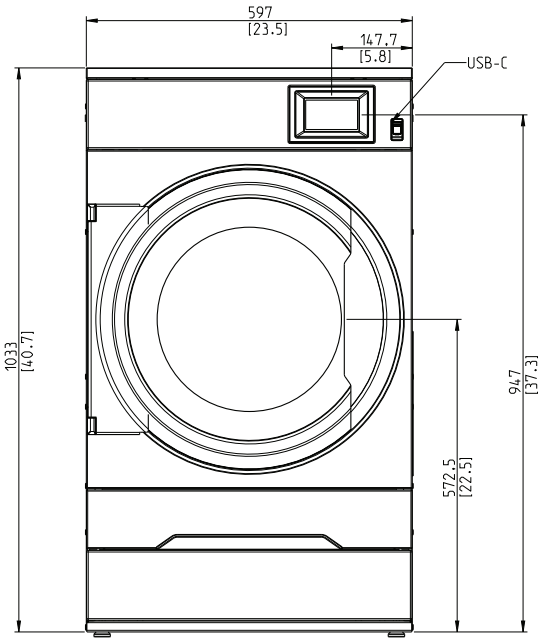
597
[23.5]
147.7
[5.8]
USB-C
1033
[40.7]
947
[37.3]
572.5
[22.5]

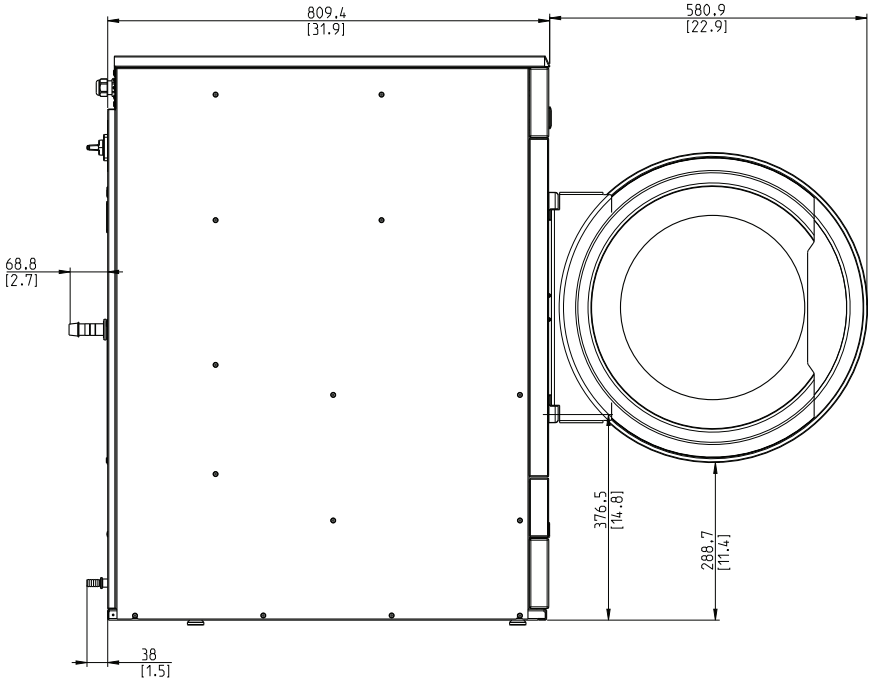
809.4
[31.9]
580.9
[22.9]
68.8
[2.7]
376.5
[14.8]
288.7
[11.4]
38
[1.5]

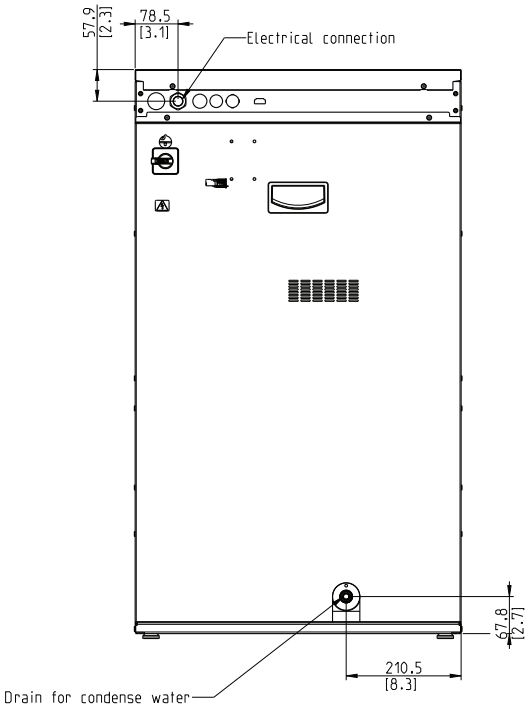
57.9
[2.3]
78.5
[3.1]
Electrical connection
67.8
[2.7]
210.5
[8.3]
Drain for condense water

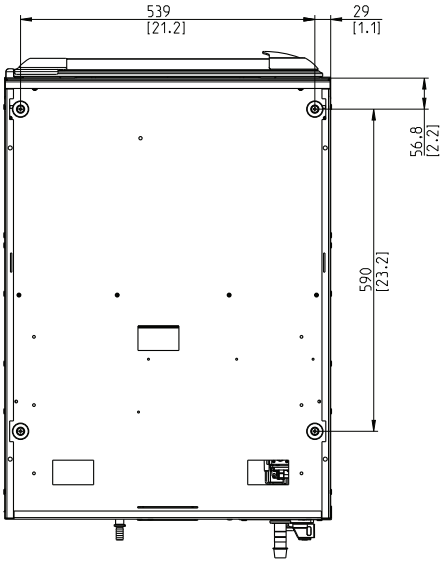
539
[21.2]
29
[1.1]
56.8
[2.2]
590
[23.2]

Options and accessories

- Insulated glass door keeps the door cool on the outside and heat on the inside, so the room temperature is not affected
- Lagoon Advanced Care
- Door, front and side panels are available in stainless steel
- Connectable to booking-/payment system or coin meter
- Base and stacking kit available for a combination with washer but also dryer on dryer
- Moisture Balance ensures accurate drying whilst saving energy, preventing over-drying and textile damage

We reserve the right to alter specifications without notice