Electrolux PROFESSIONAL

Tumble dryer
TD7-8LAB
Vented electric

High-Performance Commercial Drying • Low operating cost • Built to Last

If your laboratory results need to be trusted globally, you cannot rely on standard drying solutions. TD7-8LAB is engineered specifically for testing—delivering precision, compliance, and repeatability in every cycle. It's not just a dryer; it's your guarantee of credible results.

Dedicated programs aligned with ISO 6330 and other key textile standards.
Stainless Steel door and front panel.

40,000 DRY CYCLES

Longest life time: 40 000 cycles.
Durability is the new profit: the only investment that wins your trust cycle by cycle.

OPTIMIZED AIRFLOW & HEATING

Optimized airflow and heating, Purpose-Built for Textile Testing Ecosystems. Perfectly paired with Wascator FOM71 CLS washer → a complete test system and used globally by textile producers, retailers, and testing institutes.

MOISTURE BALANCE

Moisture Balance ensures accurate drying whilst saving energy, preventing over-drying and textile damage.

OnE Connected

Monitor and control all the operations behind your laundry room, quantifying savings and productivity. Anytime. Anywhere.

UNIVIBE

Fully personalized 4.3" touch panel: UniVibe gives the operator an easy and smooth experience and you will have all the possibilities to adapt for your business requirements.

Standards

ISO 6330	Domestic washing and drying for textile testing
ISO 3758	Care labelling
ISO 3759	Preparation, dimensional change
ISO 5077	Determination, dimensional change
ISO 15487	Appearance of apparel after washing & drying
ISO 7768	Smoothness appearance
ISO 7769	Creases
ISO 7770	Smoothness appearance of seams
prEN 16732	Slide (zip) fasteners
ISO 16322	Spirality after laundering
H&M	Hennes & Mauritz

Main specifications		TD7-8LAB
Rated capacity, filling factor 1:15	kg / lb	9.0 / 19.8
Rated capacity, filling factor 1:18	kg / lb	7.5 / 16.5
Rated capacity, filling factor 1:22	kg / lb	6.1 / 13.4
Rated capacity, filling factor 1:25	kg / lb	5.4 / 11.9
Drum, volume	litre	135
Drum, diameter	ø mm	575
Heating alternatives:		
El	kW	3.0

Consumption data[1]		El 3.0 kW
Total time	min	53
Energy consumption	kWh	3.11
Evaporation	g/min	51
Energy water evaporation	kWh/l	1.13

1. At rated capacity 1:25 100 % cotton load, 50 % initial moisture.

Electrical connections					
Heating alternative	Main voltage	Hz	Heating power kW	Total power kW	Recommended fuse A
Electric heated machines	220-240V 1/1N~	50/60	3.0	3.4	16

Air connections		
Air outlet	ø mm	125
Evacuated air, electric, 3.0 kW	m^3/h	150
Pressure drop, electric, 3.0 kW	Max. Pa	350
Sound levels		
Sound power/pressure level at drying[1]	dB(A)	63/48
Heat emission		
% of installed power, max		15
Shipping data[2]		
Weight	net, kg	109
Shipping volume	m^3	0.81

1. Sound power levels measured according to ISO 60704.
2. Average data. Crated weight/shipping volume depends on configuration. Please contact logistics for exact measures.

Produced according to ISO 9001 and ISO 14001.
Certified with CB certificate for Low Voltage Directive and S-mark according to the Machinery Directive. Protection class IP X4D.

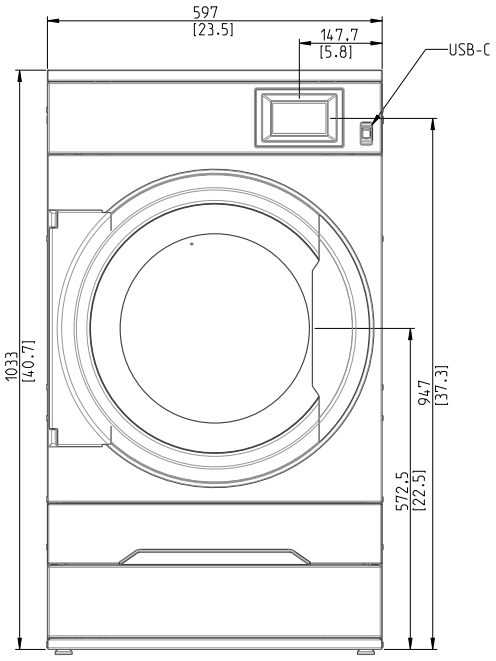
597
[23.5]
147.7
[5.8]
USB-C
1033
[40.7]
947
[37.3]
572.5
[22.5]

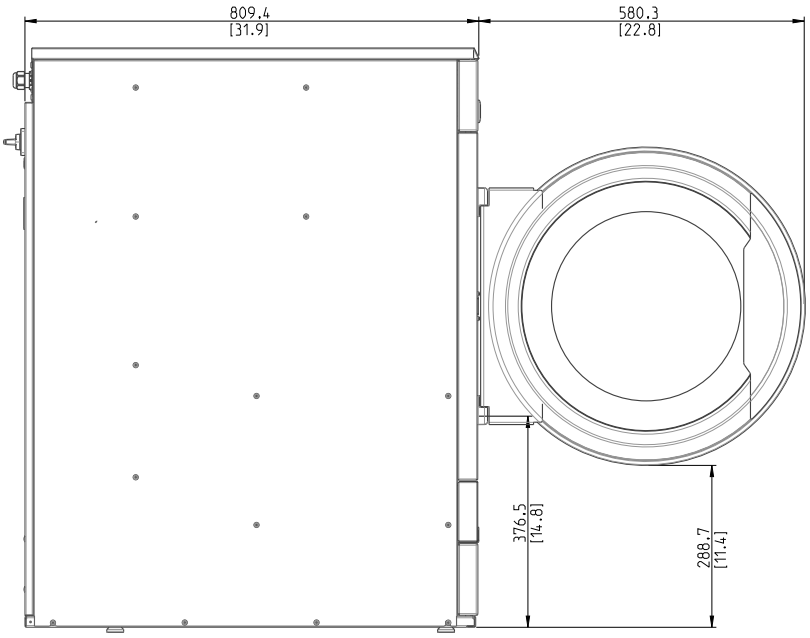
809.4
[31.9]
580.3
[22.8]
376.5
[14.8]
288.7
[11.4]

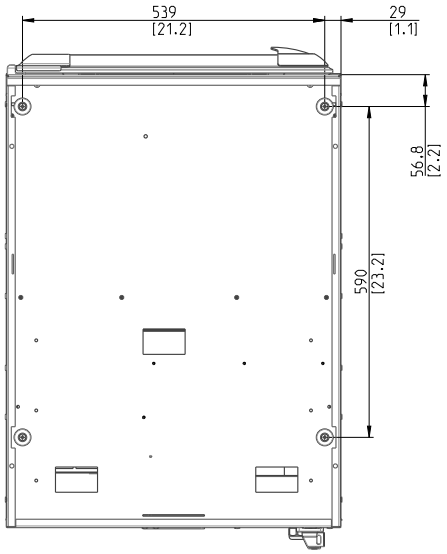
539
[21.2]
29
[1.1]
56.8
[2.2]
590
[23.2]

We reserve the right to alter specifications without notice